**Copenhagen Bath**
Bækkeskovvej
DK-2665 Vallensbæk Strand
CVR: DK32648622
Telefon: (+45) 3696 0747
contact@copenhagenbath.com
www.copenhagenbath.com

# Tårn 54 white basin

SKU: 40010453

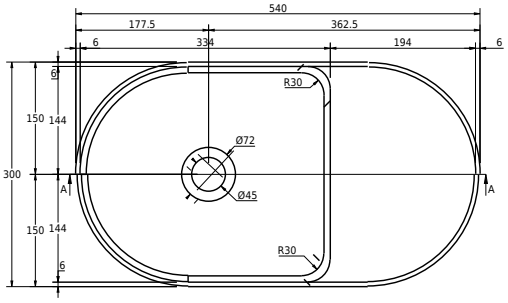


T

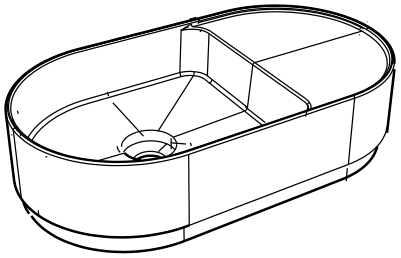

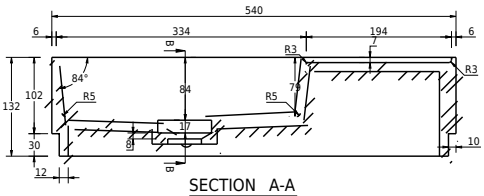


SECTION A-A

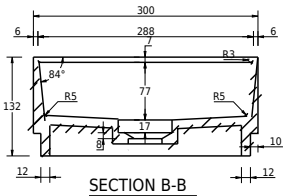


SECTION B-B

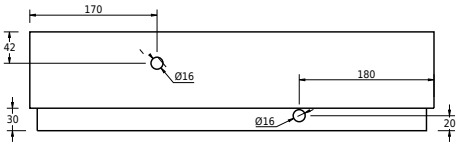


BACK VIEW

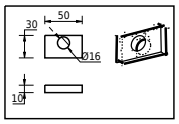


**Colour:**

**Size:** 13.2cm / 54cm / 30cm

**Weight:** 7kg nett

**Tårn 54 white basin details:**