Copenhagen Bath
Bækkeskovvej
DK-2665 Vallensbæk Strand
CVR: DK32648622
Telefon: (+45) 3696 0747
contact@copenhagenbath.com
www.copenhagenbath.com

Tårn 54 basin

SKU: 40010440

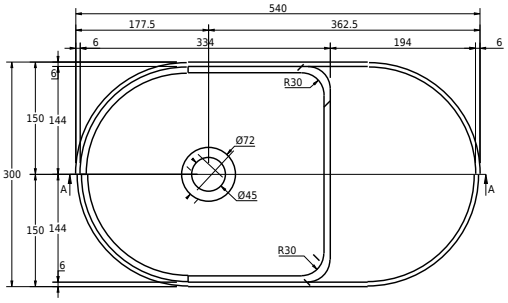

T

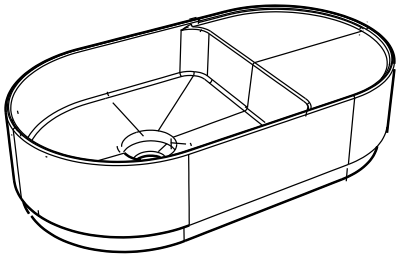

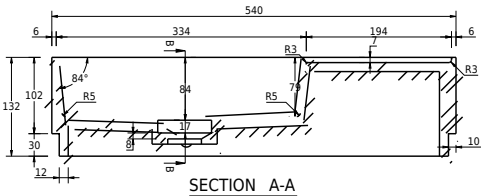

SECTION A-A

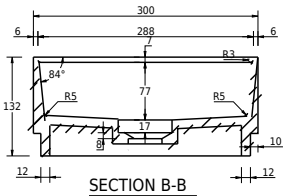

SECTION B-B

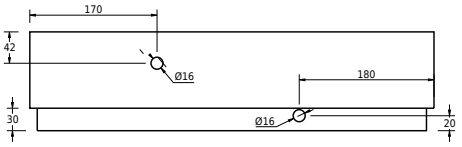

BACK VIEW

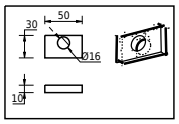

Colour:

Size: 13.2cm / 54cm / 30cm

Weight: 7kg nett

Tårn 54 basin details: