Copenhagen Bath
Roskildevej 394
DK-2610 Rødovre
VAT no.: DK32648622
Phone: 02476468850
contact@copenhagenbath.co.uk
www.copenhagenbath.co.uk

Oslo 80 right basin with shelf

SKU: 40010347

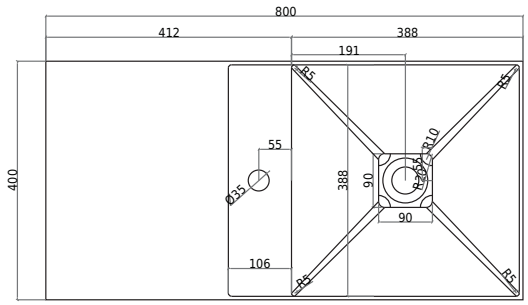

TOPVIEW

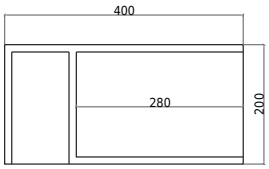

SECTION C-C

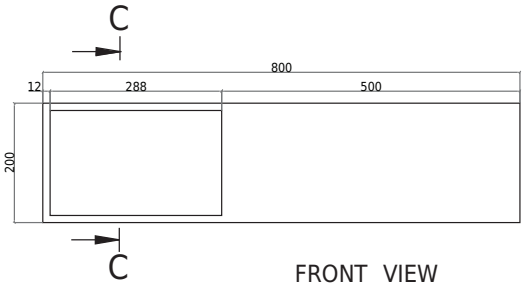

FRONT VIEW

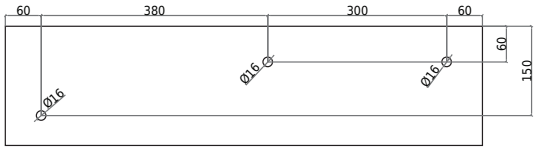

REAR VIEW

Colour:	
Size H/L/D:	20cm / 80cm / 40cm
Weight:	21kg nett

Oslo 80 right basin with shelf details: